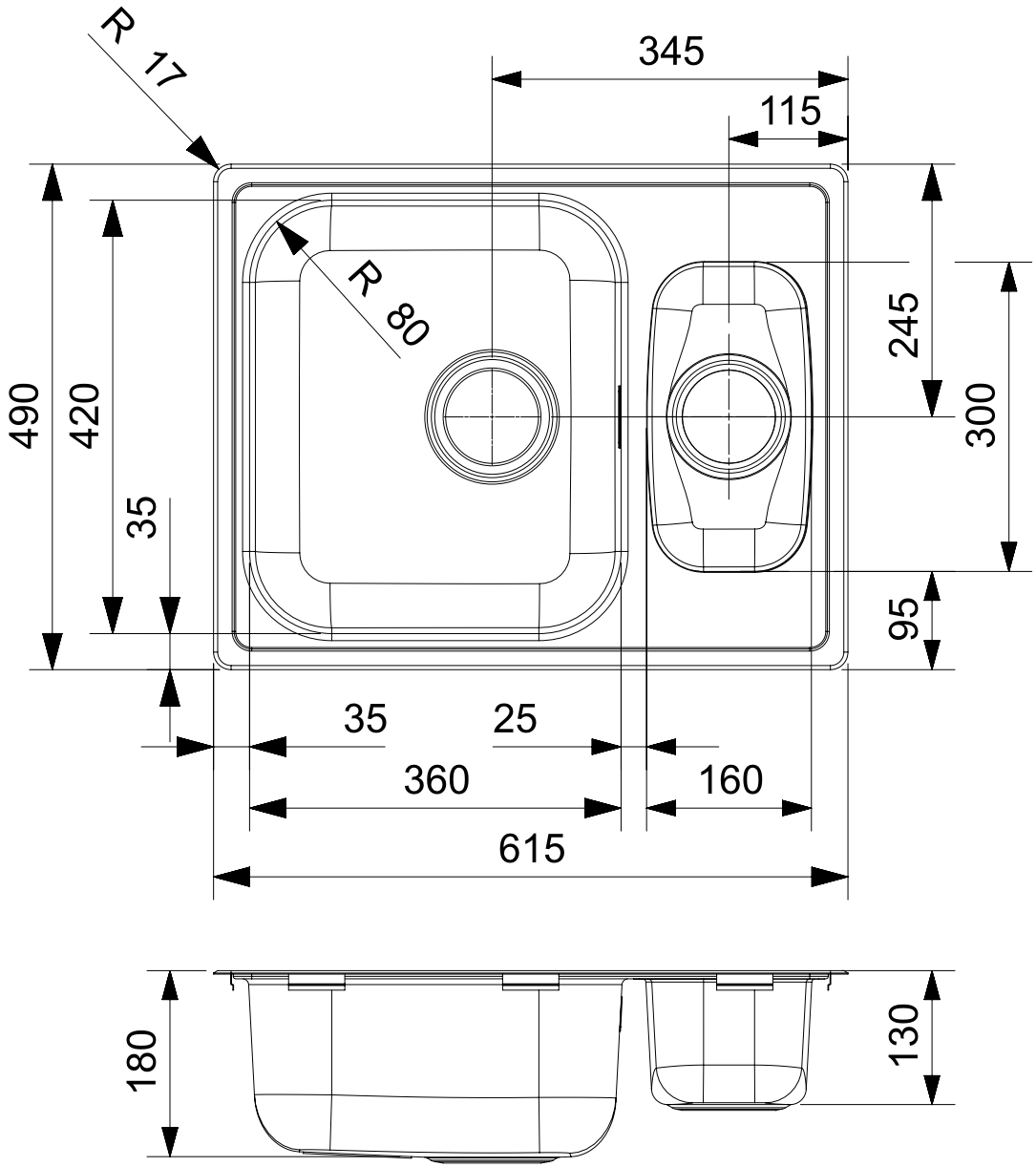

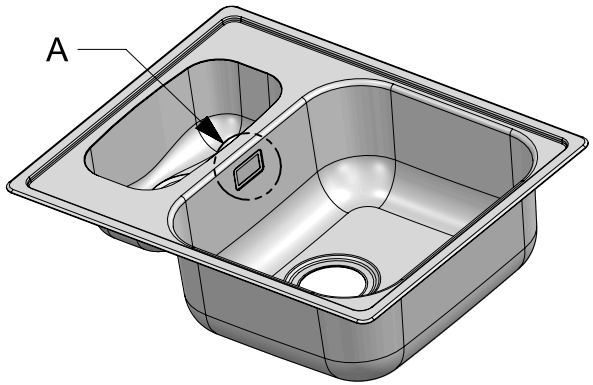

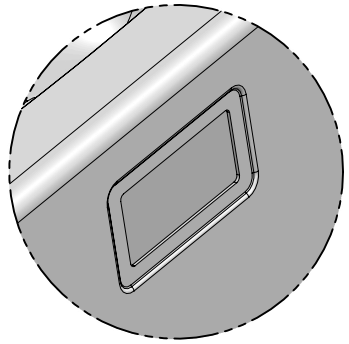

Detail A

Admiral 60 (R) KGOKG

Date: 31-10-2025

Tolerantie buitenmaat per zijde: ±0.5mm
Toleranz Aussenmasse pro Seite: ±0.5mm
Per side the outside tolerance measure: ±0.5mm