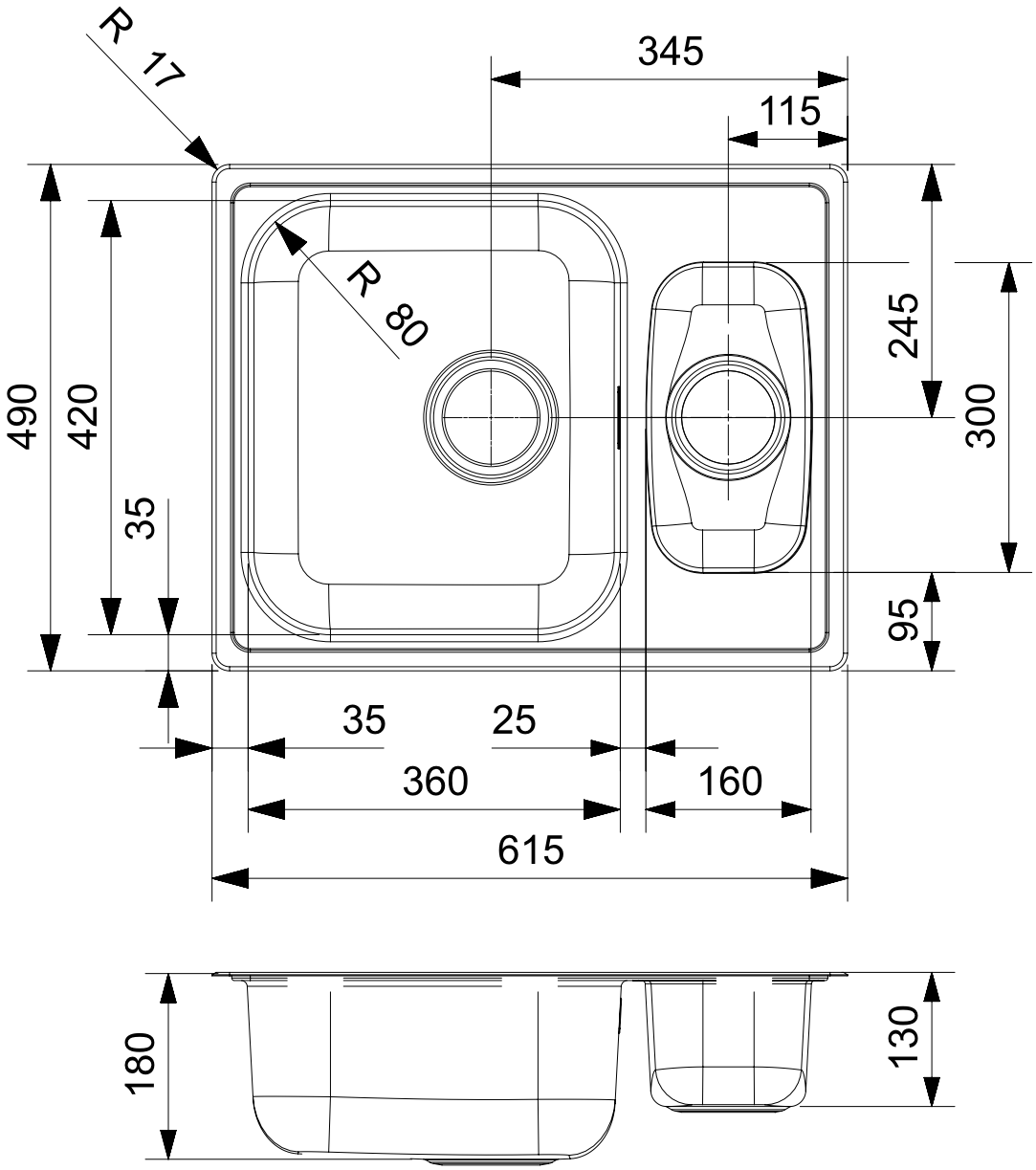

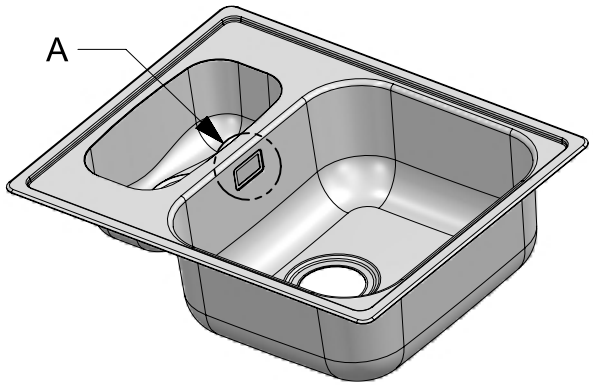

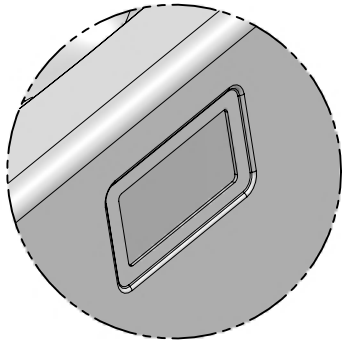

Detail A

Admiral 60 (R) KGOKG

310065N

Cabinet size / Schrankgröße: 600mm

Measured Outside Tolerance: ±2mm

Toleranz Außenmaße: ±2mm

Dimensions in mm / Maße in mm

Date: 12-01-2026