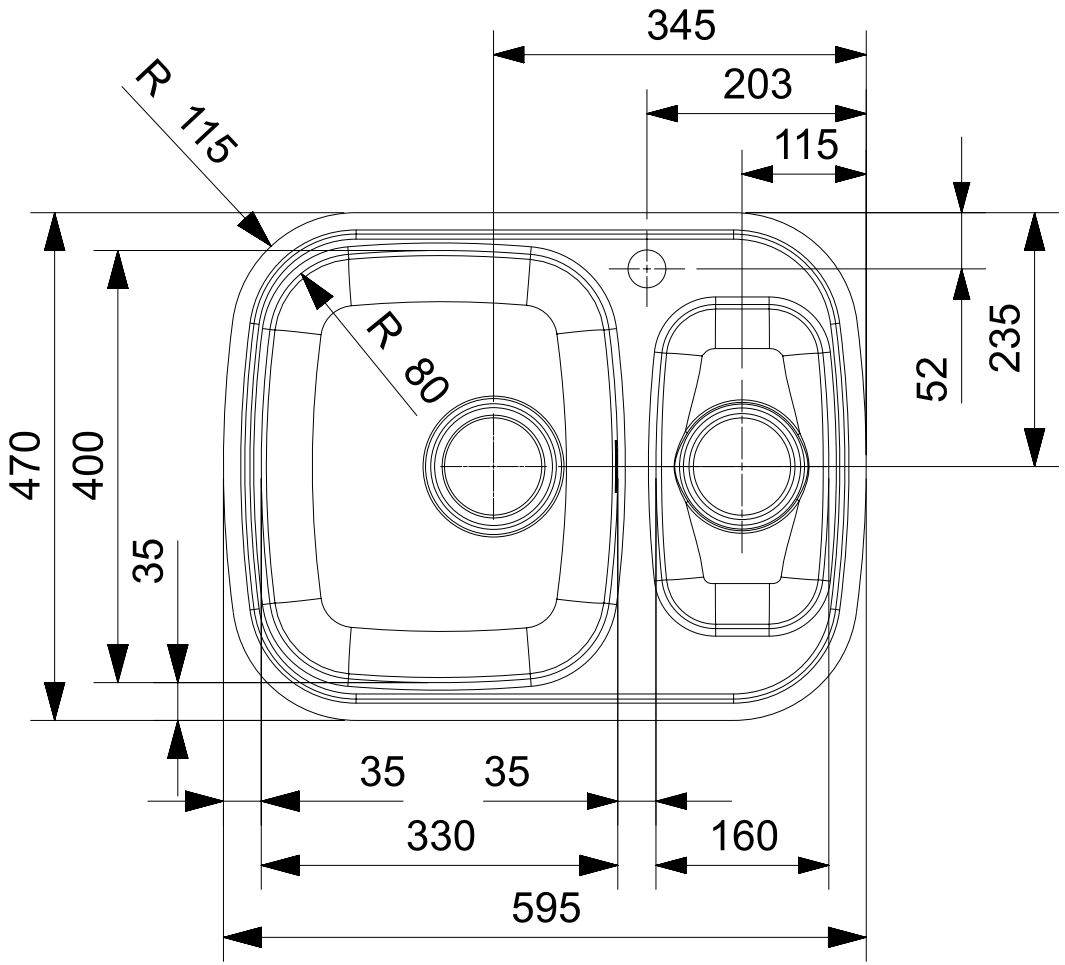

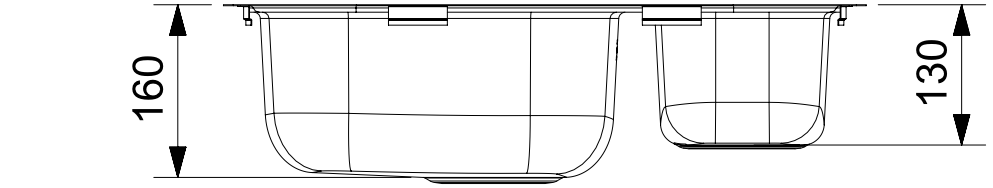

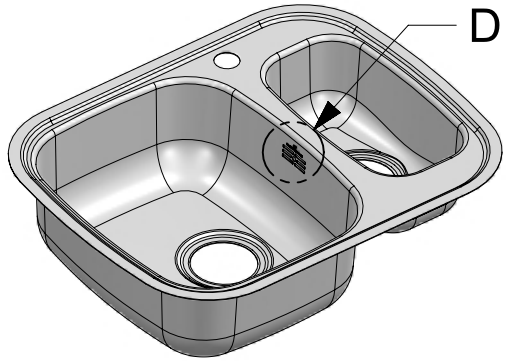

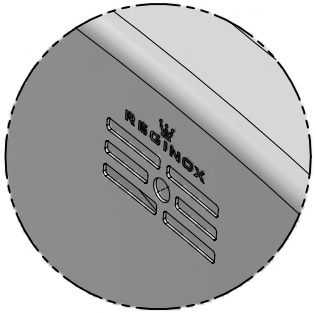

DETAIL D

Queen 60 (L) KGOKG Links

R16725

Cabinet size / Schrankgröße: 600mm

Measured Outside Tolerance: ±1mm

Toleranz Außenmaße: ±1mm

Dimensions in mm / Maße in mm

Date: 15-01-2026