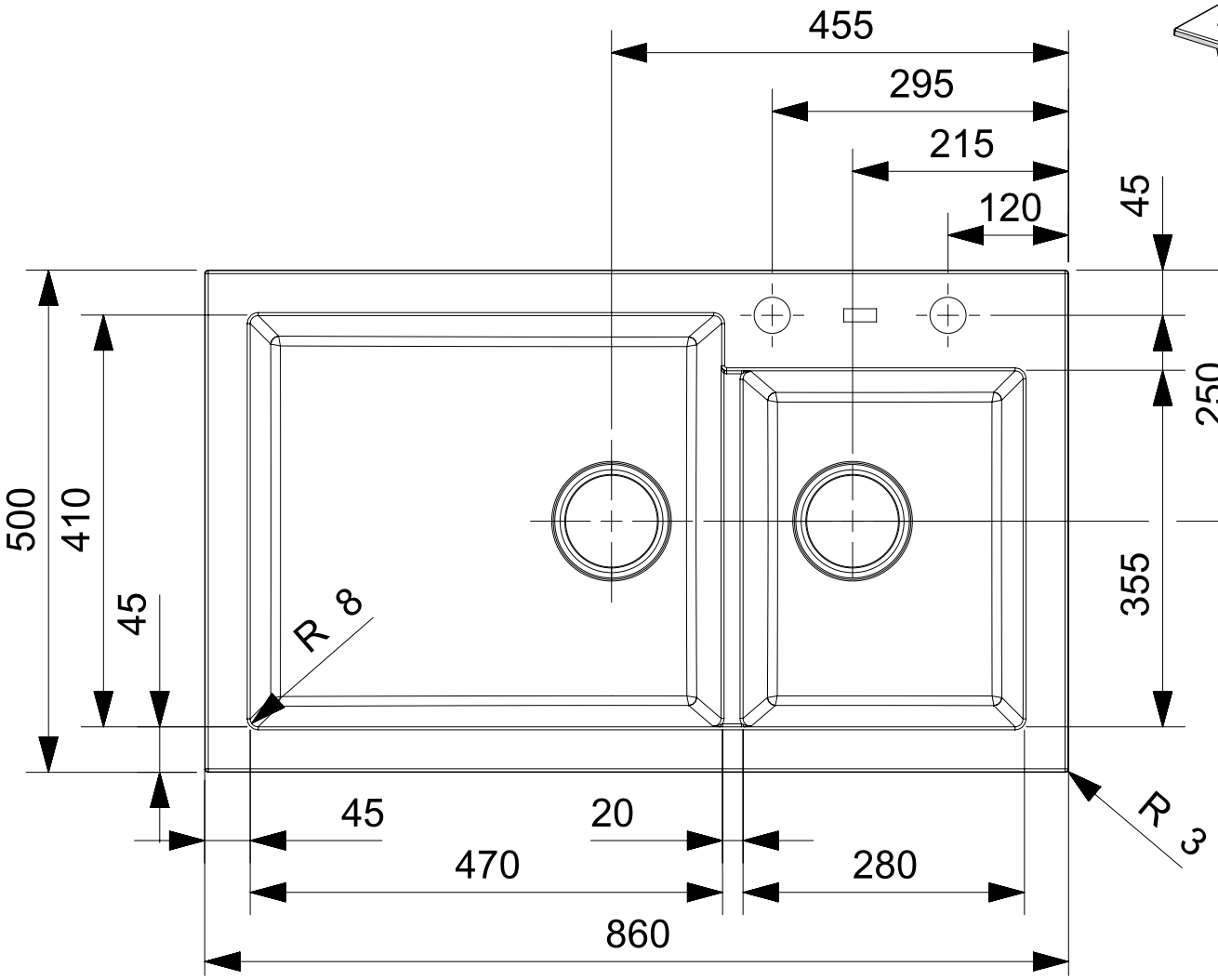

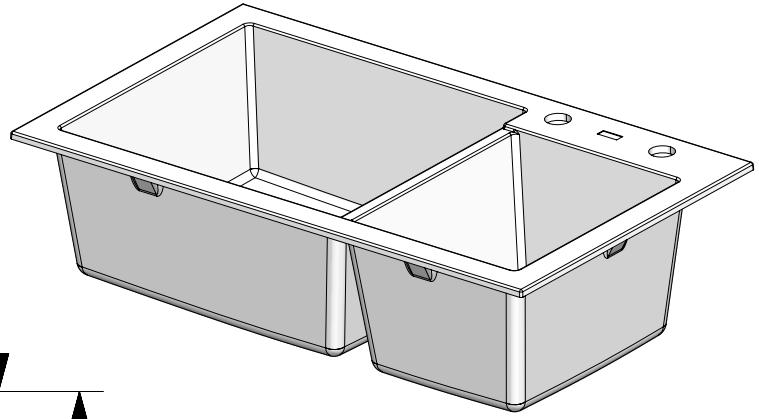

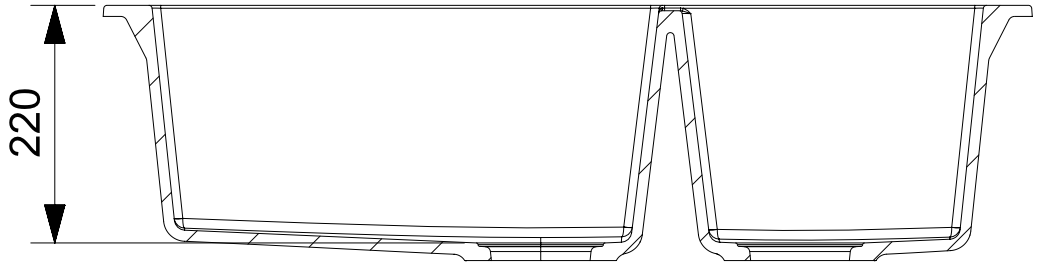

Amsterdam 25 Pure White

Date: 18-10-2022

Tolerantie buitenmaat per zijde: ±0.5mm
Toleranz Aussenmasse pro Seite: ±0.5mm
Per side the outside tolerance measure: ±0.5mm