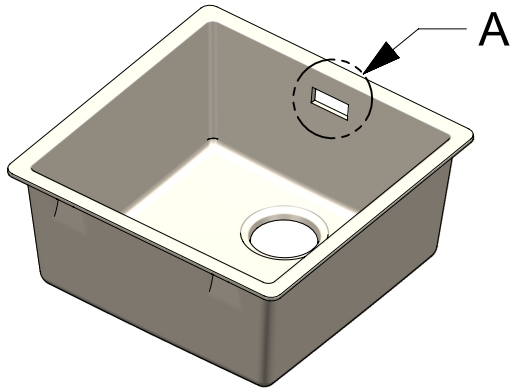

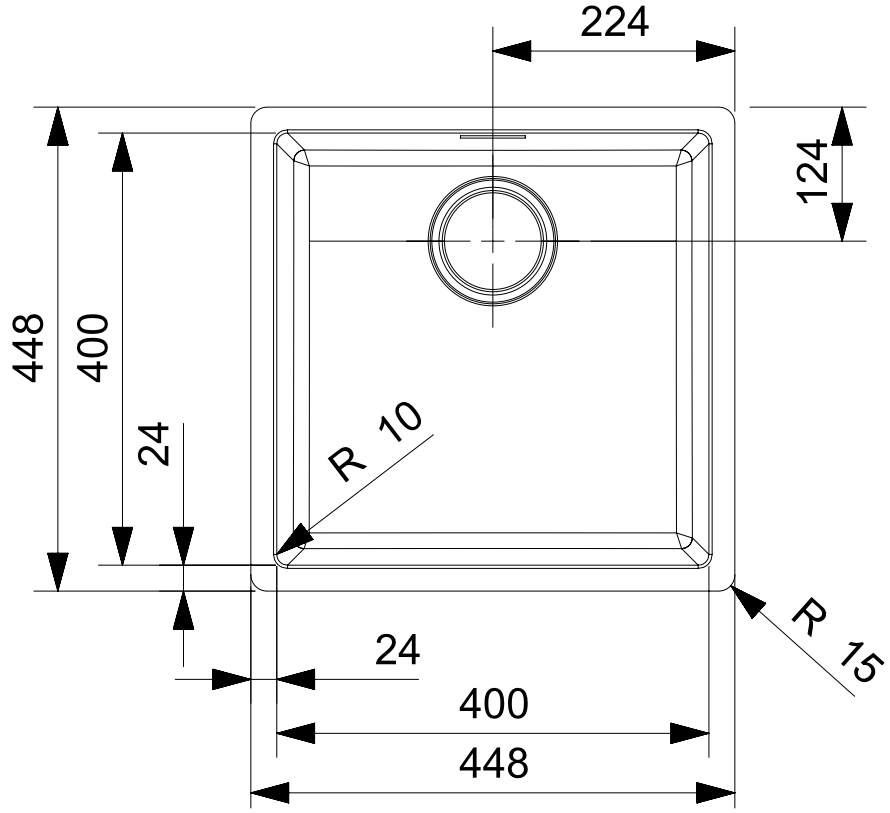

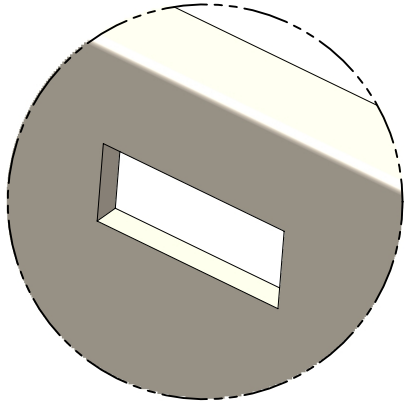

DETAIL A

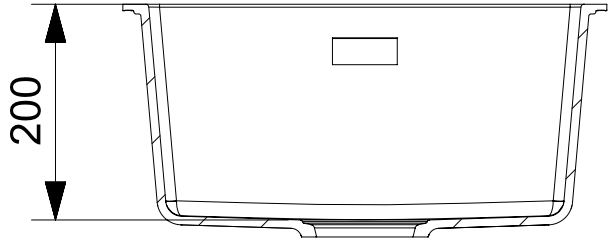

Messina 40 Soft White

Date: 22-10-2025

Tolerantie buitenmaat per zijde: ±0.5mm
Toleranz Aussenmasse pro Seite: ±0.5mm
Per side the outside tolerance measure: ±0.5mm