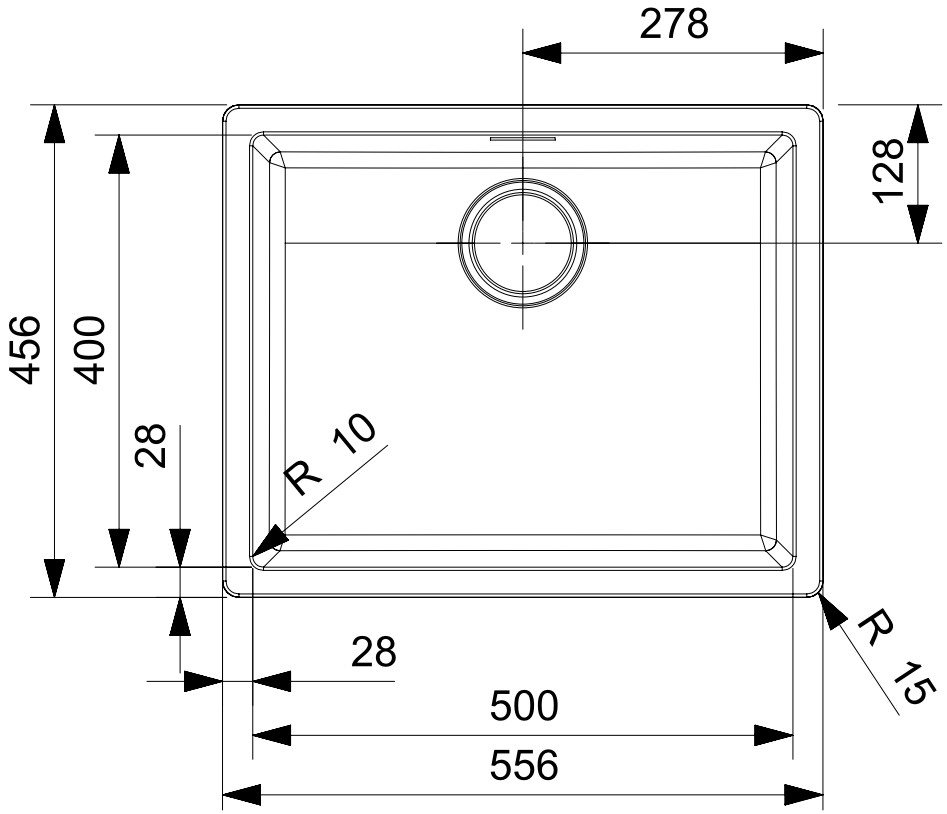

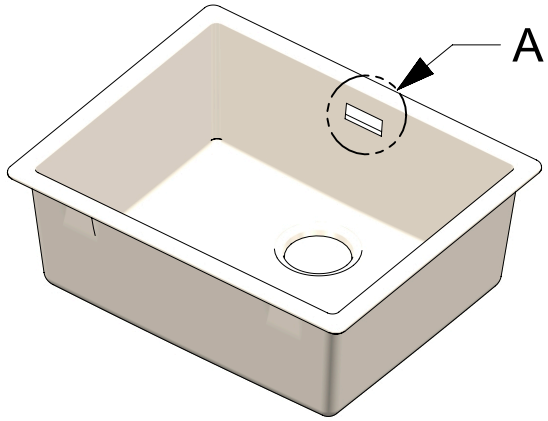

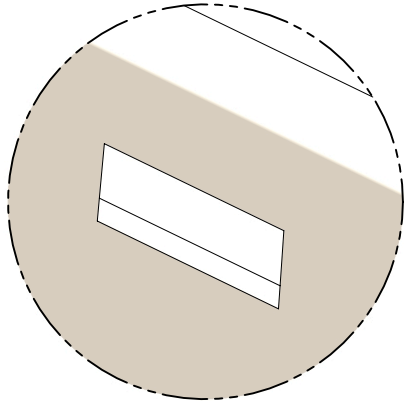

DETAIL A

Verona 50 Soft White

R41017

Cabinet size / Schrankgröße: 600mm

Measured Outside Tolerance: ±2mm

Toleranz Außenmaße: ±2mm

Dimensions in mm / Maße in mm

Date: 24-06-2026